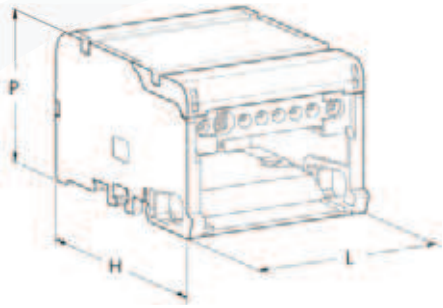

TECHNICAL FEATURES

Brass conductors
Galvanized steel screws included
Insulation between phases
Front removable protection screen
(except RPQ1025)
Self-extinguishing insulating structure : UL 94-V0
Quick hook-up on DIN rails
Compliant with standard IEC 947-7-1
Low voltage auxiliary equipment
terminal boards for copper conductors

2 POLE 40-80-100/125 A

Code	Reference		L (mm)	H (mm)	P (mm)	Fix. hole space (mm)
RPB0990	RPB 40-08	1	66	46	51	45
RPB0995	RPB 80-07	1	66	46	51	45
RPB1000	RPB 125-06	1	66	46	51	45
RPB1005	RPB 125-14	1	132	46	51	112

4 POLE 40-80-100/125 A

Code	Reference		L (mm)	H (mm)	P (mm)	Fix. hole space (mm)
RPQ0980	RPQ 40-08	1	66	84	50	45
RPQ0985	RPQ 40-14	1	100	84	50	80
RPQ0990	RPQ 80-07	1	66	84	50	45
RPQ0995	RPQ 80-12	1	100	84	50	80
RPQ1000	RPQ 125-06	1	66	84	50	45
RPQ1005	RPQ 125-10	1	100	84	50	80
RPQ1010	RPQ 125-14	1	132	84	50	112
RPQ1025	RPQ C-125	1	98	75	49	55

RPQ1025: Compact 4 pole distribution unit 125 A
7 outputs per phase
10 outputs for neutral
easy wiring
IP20

TECHNICAL DATA

Code	Type	In (A)	IN/OUT	Stripped wire (mm²)	Wire with ferrule (mm²)	No.	ø (mm)	(Nm)	Icw (kA)	Ipk (kA)	Ui (V)
RPB0990	2 POLE 8 outputs	40	IN →	2,5 ÷ 6	1,5 ÷ 6	1	5,5	2 - 3	4,2	20	500
			← OUT	2,5 ÷ 6	1,5 ÷ 6	1	5,5	2 - 3			
			← OUT	1,5 ÷ 4	1,5 ÷ 4	4	4	2 - 3			
			← OUT	1,5 ÷ 2,5	1,5 ÷ 2,5	3	3	2 - 3			
RPB0995	2 POLE 7 outputs	80	IN →	10 ÷ 25	6 ÷ 16	1	7,5	2 - 3	4,5	20	500
			← OUT	1,5 ÷ 4	1,5 ÷ 4	5	4,5	2 - 3			
			← OUT	1,5 ÷ 4	1,5 ÷ 4	2	5	2 - 3			
RPQ0980	4 POLE 8 outputs	40	IN →	2,5 ÷ 6	1,5 ÷ 6	1	5,5	2 - 3	4,2	20	500
			← OUT	2,5 ÷ 6	1,5 ÷ 6	1	5,5	2 - 3			
			← OUT	1,5 ÷ 4	1,5 ÷ 4	4	4	2 - 3			
			← OUT	1,5 ÷ 2,5	1,5 ÷ 2,5	3	3	2 - 3			
RPQ0985	4 POLE 14 outputs	40	IN →	2,5 ÷ 6	1,5 ÷ 6	1	5,5	2 - 3	4,2	20	500
			← OUT	2,5 ÷ 6	1,5 ÷ 6	1	5,5	2 - 3			
			← OUT	1,5 ÷ 4	1,5 ÷ 4	7	4,0	2 - 3			
			← OUT	1,5 ÷ 2,5	1,5 ÷ 2,5	6	3	2 - 3			
RPQ0990	4 POLE 7 outputs	80	IN →	10 ÷ 25	6 ÷ 16	1	7,5	2 - 3	4,5	20	500
			← OUT	1,5 ÷ 4	1,5 ÷ 4	5	4,5	2 - 3			
			← OUT	1,5 ÷ 4	1,5 ÷ 4	2	5	2 - 3			
RPQ0995	4 POLE 12 outputs	80	IN →	10 ÷ 25	6 ÷ 16	1	7,5	2 - 3	4,5	20	500
			← OUT	10 ÷ 25	6 ÷ 16	1	7,5	2 - 3			
			← OUT	1,5 ÷ 4	1,5 ÷ 4	8	4,5	2 - 3			
			← OUT	1,5 ÷ 4	1,5 ÷ 4	2	5	2 - 3			
			← OUT	4 ÷ 10	2,5 ÷ 6	1	6	2 - 3			
RPB1000	2 POLE 6 outputs	100 / 125	IN →	10 ÷ 35	10 ÷ 25	1	9,0	2 - 3	4,2	20	500
			← OUT	2,5 ÷ 6	1,5 ÷ 6	5	5,5	2 - 3			
			← OUT	10 ÷ 25	6 ÷16	1	7,5	2 - 3			
RPB1005	2 POLE 14 outputs	100 / 125	IN →	10 ÷ 35	10 ÷ 25	1	9,0	2 - 3	4,2	20	500
			← OUT	10 ÷ 35	10 ÷ 25	1	9,0	2 - 3			
			← OUT	2,5 ÷ 6	1,5 ÷ 6	11	5,5	2 - 3			
			← OUT	10 ÷ 25	6 ÷16	2	7,5	2 - 3			
RPQ1000	4 POLE 6 outputs	100 / 125	IN →	10 ÷ 35	10 ÷ 25	1	9,0	2 - 3	4,2	20	500
			← OUT	2,5 ÷ 6	1,5 ÷ 6	5	5,5	2 - 3			
			← OUT	10 ÷ 25	6 ÷16	1	7,5	2 - 3			
RPQ1005	4 POLE 10 outputs	100 / 125	IN →	10 ÷ 35	10 ÷ 25	1	9,0	2 - 3	4,2	20	500
			← OUT	10 ÷ 35	10 ÷ 25	1	9,0	2 - 3			
			← OUT	10 ÷ 25	6 ÷16	2	7,5	2 - 3			
			← OUT	2,5 ÷ 6	1,5 ÷ 6	7	5,5	2 - 3			
RPQ1010	4 POLE 14 outputs	100 / 125	IN →	10 ÷ 35	10 ÷ 25	1	9,0	2 - 3	4,2	20	500
			← OUT	10 ÷ 35	10 ÷ 25	1	9,0	2 - 3			
			← OUT	10 ÷ 25	6 ÷16	2	7,5	2 - 3			
			← OUT	2,5 ÷ 6	1,5 ÷ 6	11	5,5	2 - 3			
RPQ1015	4 POLE 11 outputs	160	IN →	10 ÷ 50	10 ÷ 50	1	11,5	8 -10	9	22	600
			← OUT	10 ÷ 35	10 ÷ 25	3	8,5	2 - 3			
			← OUT	2,5 ÷ 16	1,5 ÷ 16	8	7	2 - 3			
RPQ1016 RPQ1017	4 POLE Modular 11 outputs	160	IN →	10 ÷ 50	10 ÷ 50	1	11,5	8 - 10	9	22	600
			← OUT	10 ÷ 35	10 ÷ 16	3	8,5	2 -3			
			← OUT	2,5 ÷ 16	1,5 ÷ 16	8	7	2 -3			
RPQ2017	NEUTRAL 14 outputs	160	← OUT	10 ÷ 35	10 ÷ 16	4	8,5	2 -3	9	22	600
			← OUT	2,5 ÷ 16	1,5 ÷ 16	10	7	2 -3			
RPQ1018	4 POLE Side Input 11 outputs	160	IN →	10 ÷ 50	10 ÷ 50	1	12	8 - 10	9	22	600
			← OUT	10 ÷ 35	10 ÷ 25	3	8,5	2 - 3			
			← OUT	2,5 ÷ 16	1,5 ÷ 16	8	7	2 - 3			
RPQ1025	4 POLE Compact 7 outputs	100 / 125	IN →	6 ÷ 35	6 ÷ 25	1	8,5	1,5	4,2	24	690
			← OUT	1,5 ÷ 6	1,5 ÷ 6	5	5,5	0,8			
			← OUT	1,5 ÷ 16	1,5 ÷ 10	2	6	1,5			

Icc pk = Short-circuit current peak value expressed in kA
Icw = Effective value of short-circuit current, duration equal to 1 second, expressed in kA as per standard IEC 947-7-1
Ui = Nominal insulation voltage