10/92 AWA 34-614

HK-K240
H-K240/5
D-K240

A HK-K240

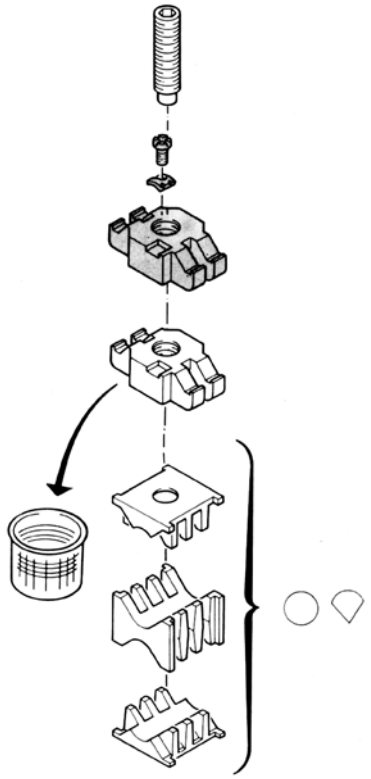

HK-K240/5

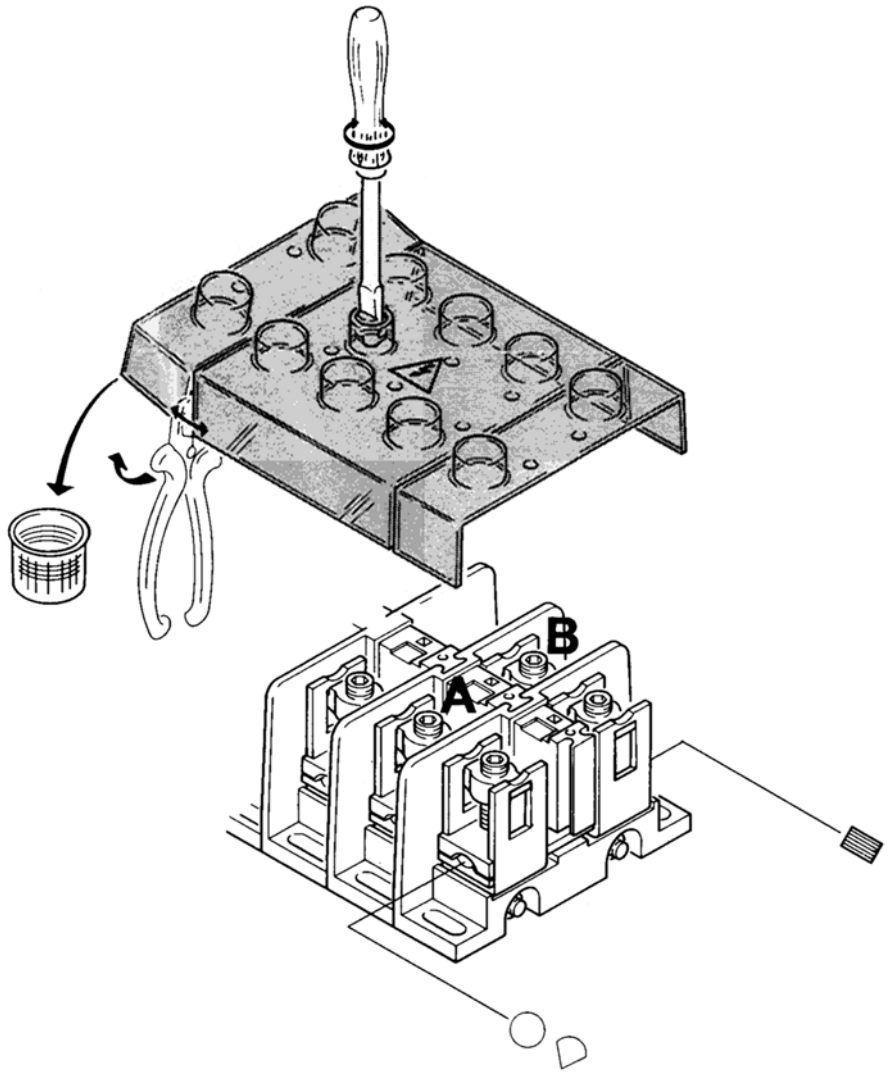

B HK-K240

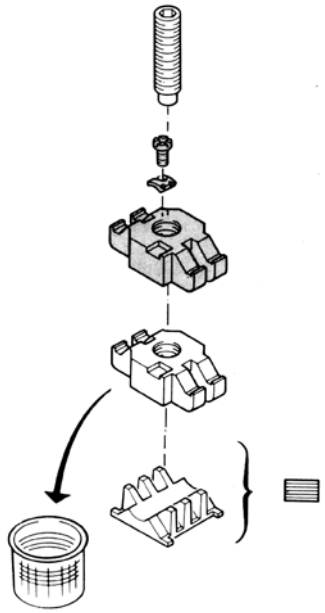

D-K240

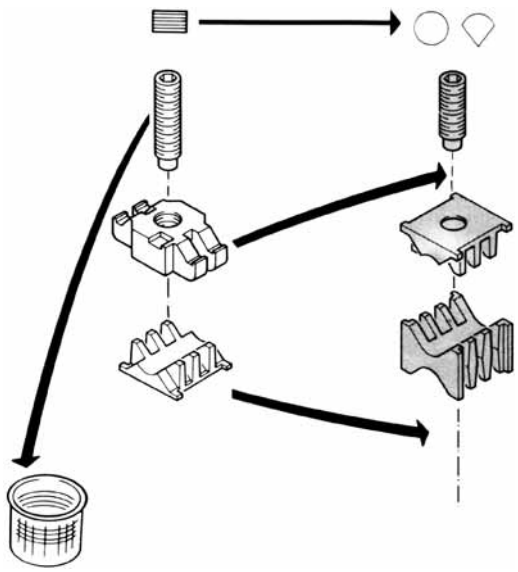

Eaton Industries GmbH, Hein-Moeller-Straße 7-11, D-53115 Bonn
© 1992 by Eaton Industries GmbH
Änderungen vorbehalten
10/92 AWA 34-614
Printed in Germany (06/10)
DE05 DHW/DM